MICRO SWITCH
A DIVISION OF MINNEAPOLIS-HONEYWELL REGULATOR COMPANY
FREEPORT, ILLINOIS
FED. MFR. CODE 91929

SWITCH—ENCLOSED

CATALOG LISTING
EX-AR800

M

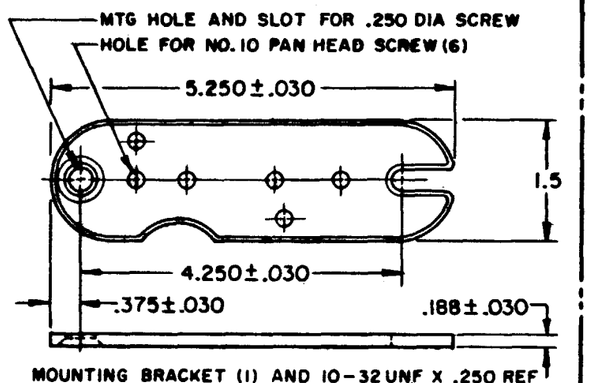

MOUNTING BRACKET (1) AND 10-32 UNF X .250 REF PAN HEAD SCREW (2) FURNISHED UNASSEMBLED
SCALE - HALF SIZE

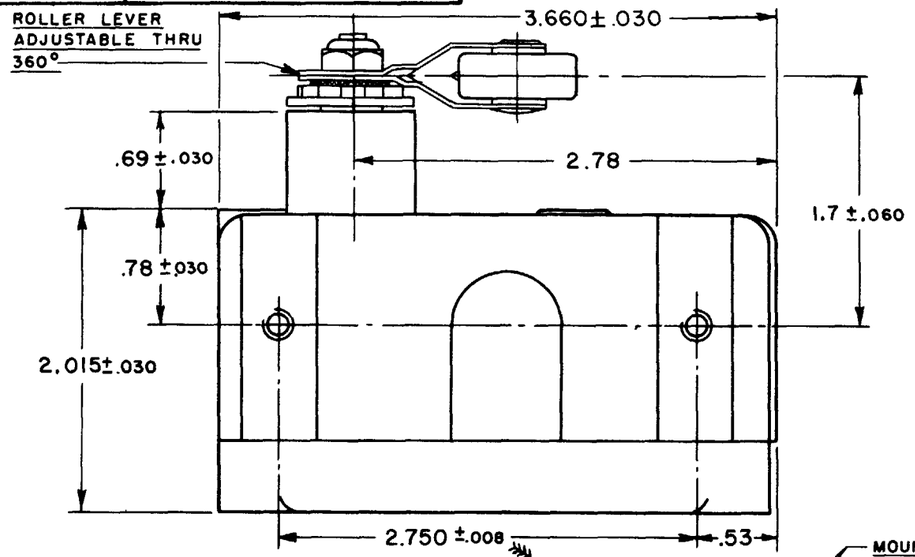

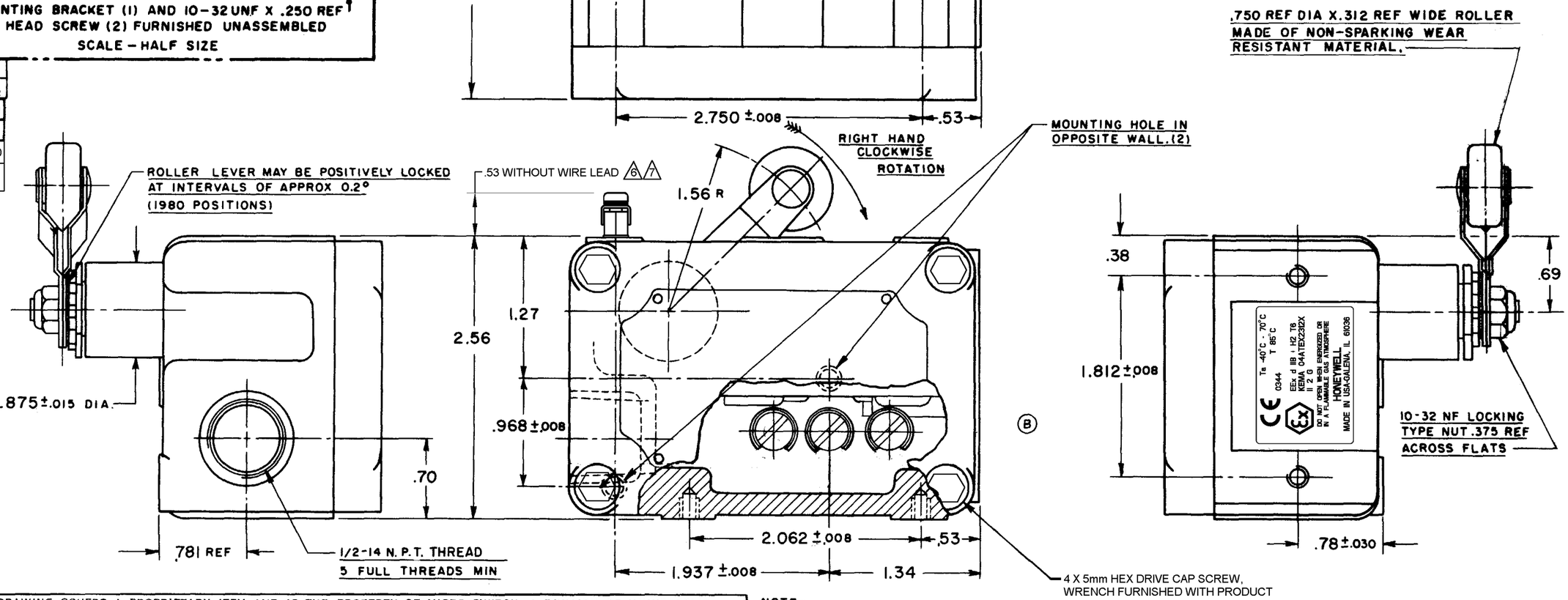

L	CO 70715B
	TSM 10 OCT 91
M	C073019
	MAM 19 SEP 92
N	0012750
	KR 27APR05

REVISIONS

A	SR 8717	MBF 13 JAN 6
B	CO 16851	MBF 10 DEC 62
C	CO 17653	MBF 20 JAN 64
D	CO 18276	RJW 18 JUNE 64
E	CO 19878	RER 27 OCT 66
F	CO 26103	DLF 18 JUL 69
G	CO 31559	DBW 23 MAY 73
H	CO 38995	WLW 16 AUG 77
J	CO 58360	CSH 9 NOV 85
K	CO 61381	DAW 22 APR 87

DRAWING NUMBER	M
RELEASE NO.	SR 8717
REPLACES	
ISSUE	14
CHECK	AK 27APR05
CHECK	REJ 20 OCT 58
CHECK	RCH 18 JAN 60
CHECK	
DRAWN	M.B.F. 16 OCT. 58

FO-50378.003

THIS DRAWING COVERS A PROPRIETARY ITEM AND IS THE PROPERTY OF MICRO SWITCH, A DIVISION OF MINNEAPOLIS-HONEYWELL REGULATOR CO. THIS DRAWING IS NOT TO BE COPIED OR USED WITHOUT THE APPROVAL OF MICRO SWITCH.

CHARACTERISTICS

OPERATING FORCE — 1/2-1 1/4 LBS
RELEASE FORCE — 1/4 LB MIN
PRETRAVEL — .219 MAX 8°
DIFFERENTIAL TRAVEL — .007 MAX 1/4°
DO NOT OVERTRAVEL MORE THAN — 90°
SWITCH-BASIC REPLACEMENT — BZ-2R-P4

ELECTRICAL DATA

CONTACT ARRANGEMENT
S. P. D. T.

Ⓒ -L96- 15 A-125, 250, OR 480 VAC
1/2 A-125 VDC; 1/4 A-250 VDC
1/8 HP-125 VAC, 1/4 HP-250 VAC

SCALE FULL
DO NOT SCALE PRINT

UNLESS OTHERWISE SPECIFIED
DIMENSIONS ARE IN INCHES
TOLERANCES ARE:

ONE PLACE	(.0)	±.030
TWO PLACE	(.00)	±.015
THREE PLACE	(.000)	±.005
ANGLES		±

WEIGHT

NOTE-
1 - MOUNTING SCREW HOLE, 10-32 NF-2B THREADS X .219 REF DEEP. (8)
2 - 8-32 NC X.219 REF TERMINAL SCREWS AND CUPWASHERS.
3 - EXPLOSION PROOF—UNDERWRITER'S LAB INC LISTING FOR HAZARDOUS LOCATIONS NEMA 7, CLASS I, GROUPS B, C AND D, NEMA 9, CLASS II GROUPS E, F AND G.
4 - EUROPEAN HAZARDOUS LOCATIONS DESIGNATION: EEx d IIB + H2 T6 CATAGORY II 2 G
5 - SEAL RATING: NEMA 1
6 EXTERNAL GROUND SCREW MAY BE ASSEMBLED TO ANY UNUSED MOUNTING SCREW HOLE
7 ASSEMBLE PROVIDED SPLIT LOCKWASHER BETWEEN GROUND LUG AND HOUSING